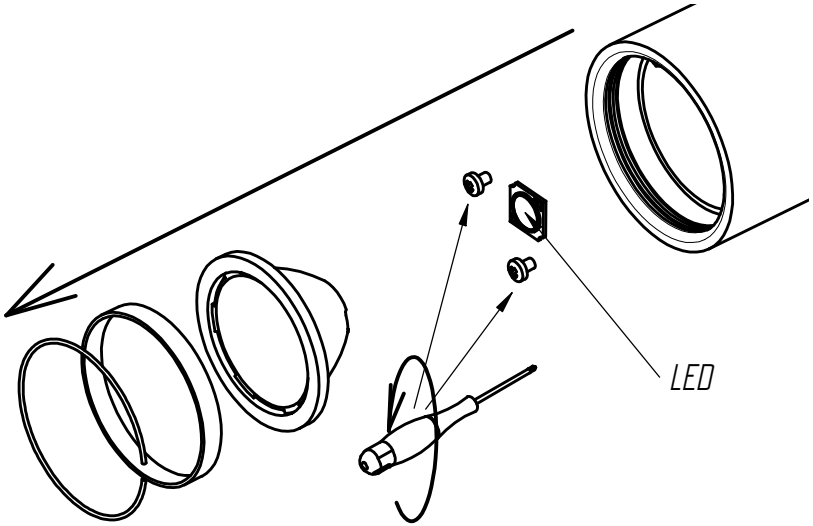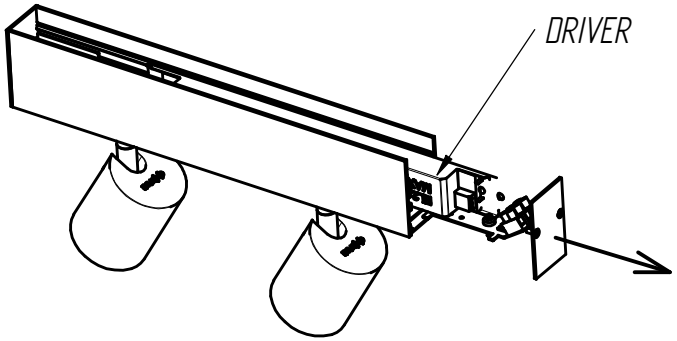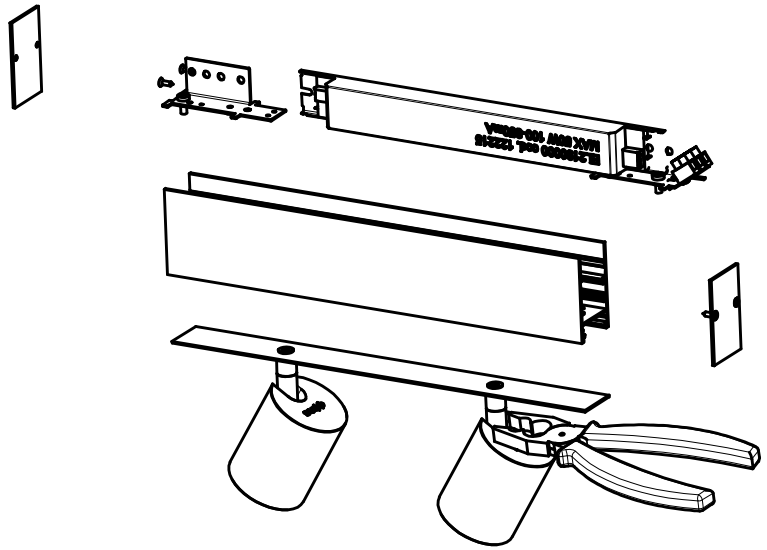RAEE / WEEE / DEEE