RAEE / WEEE / DEEE

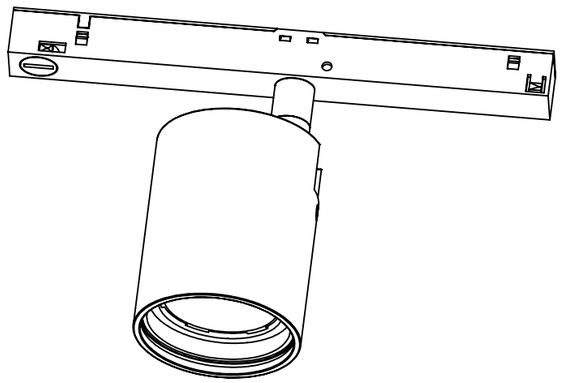

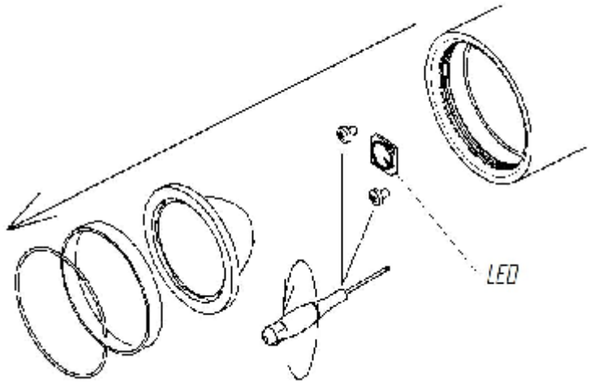

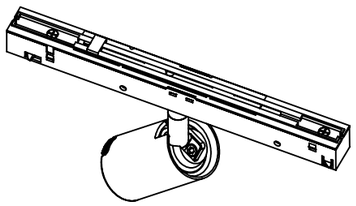

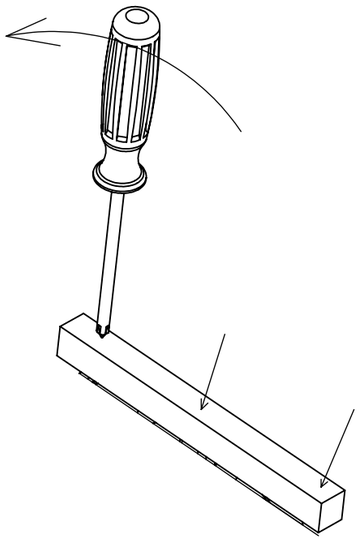

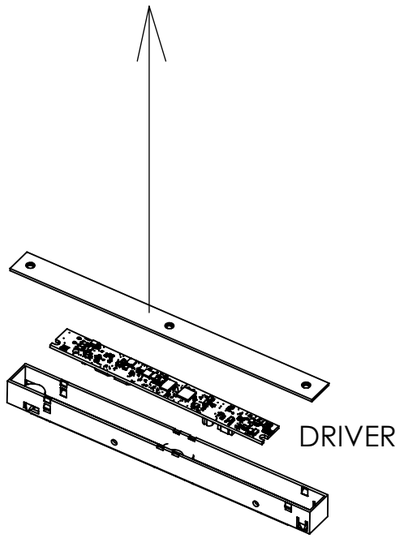

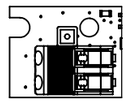

exenia
part of the lumenpulse GROUP